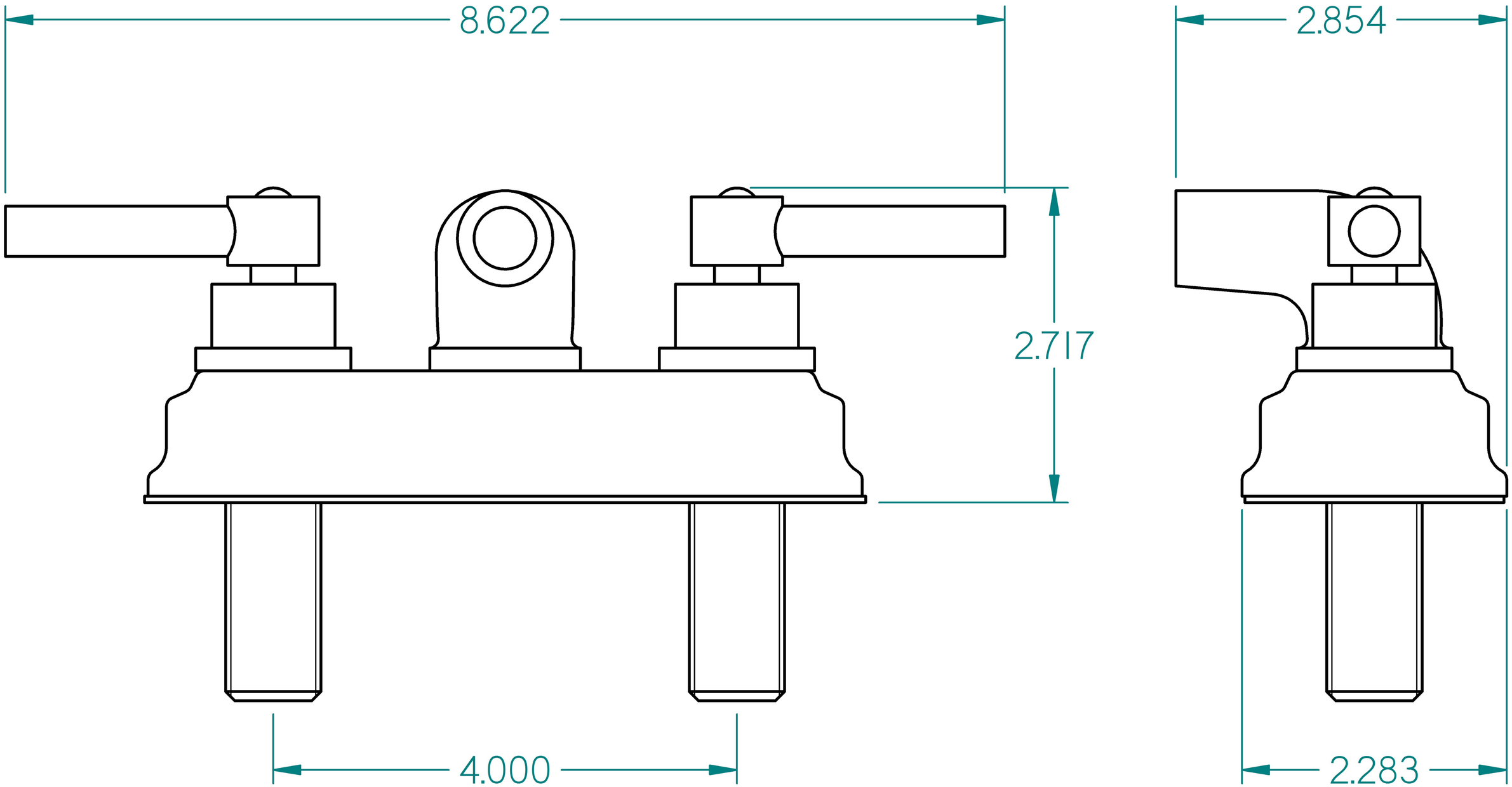

賀吉金屬企業股份有限公司 TOYA VALVES & METAL CO , LTD.	UNIT:	INCH	PART NO.	TP21740
	Scale:	1:5		
	PROJECT			