TP8657 17 Master Equipment Superior Stainless Electric Grooming Table Black

Tabletop

Accessories Included:
- Foldable Grooming Arm
- 20" Grooming Loop Black
- Leg Levelers (4)

Materials & Color:
- Table Frame: 14 gauge, 2mm thick type 304 stainless steel.
- Tabletop: ½" Wood and PVC with black silicone matting.
- Grooming Arm: 18 gauge, 1.2mm thick type 304 stainless steel. Clamp is 18 gauge, 1.2mm thick type 304 stainless steel. Knobs are black polypropylene. Screws are stainless steel.
- Foot Pedals: Black Polypropylene.

Voltage & Power:
- Rated Power: 98Watts
- Input Voltage: 110Volts
- Output Voltage: 36Volts
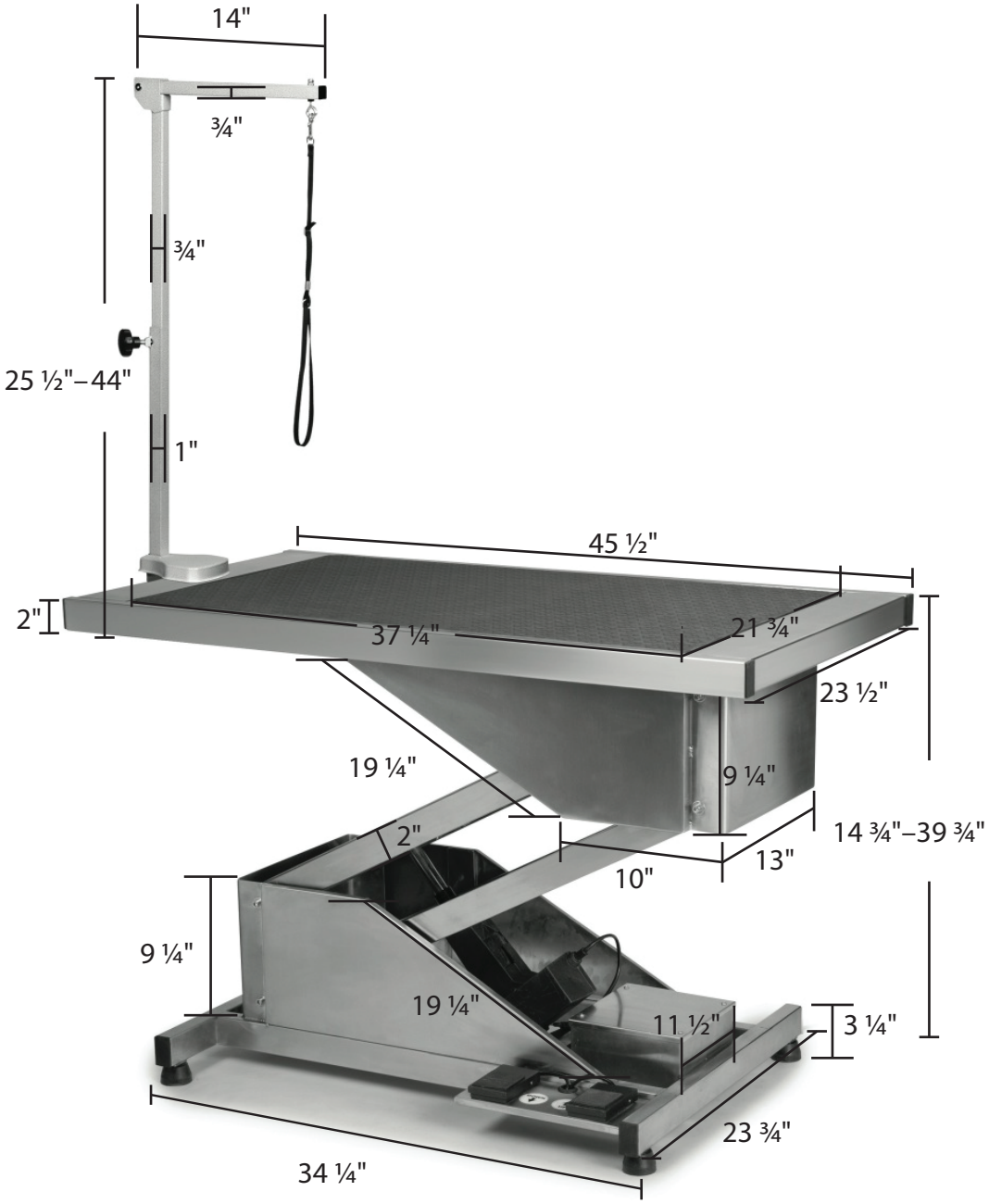
Other Features:
- Weight Capacity: 220 lbs.
- Rate of Descent: 1.14 inches/second.
- Rising Rate: 0.91 inches/second